August 2014

Fit-PC4
Product Overview

Maxim Birger

CompuLab

Agenda

- AMD G-Series System-on-Chip
- fit-PC4 Product Brief
  - Features Highlight, Top Level Block Diagram
  - Models and Processor SKUs
  - Memory Interface
  - Graphics and Display Interface
  - Storage Interface
  - Connectivity
  - Power & Environmental Characteristics
- Unique Functionality
- Prices
- FACE Modules

AMD G-Series x86 Mobile System-on-Chip

fit-PC4 – Operating Systems

- Windows 8, 32/64-bit
- Windows 7, 32/64-bit
- Linux Mint 16, 32/64-bit
- Linux Mint 15, 32/64-bit
- Linux Ubuntu, 32/64-bit
- Other Linux distros can be verified by customers
- Embedded versions

fit-PC4 – Front/Back Panel View

Pro

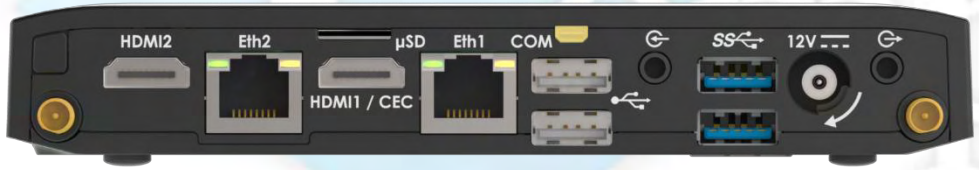

Value

fit-PC4 – Features Highlight

- Platform
  - AMD G-Series SoC @ 5W – 25W
  - Quad/Dual core 64-bit @ 1.0GHz – 2.0GHz
  - Up to 16GB DDR3/3L-1600 SDRAM (1.5V/1.35V)
  - Up to 16GB DDR3U-1333 SDRAM (1.25V)
  - 2.5” HDD/SSD storage
- Connectivity
  - Dual HDMI display interface
  - Analog/digital audio input/output
  - Intel GbE LAN x2
  - Intel dual band WLAN 802.3 ac + Bluetooth 4.0
  - USB3.0 x2, USB2.0 x6
  - Micro SD slot accept SD/SDHC/SDXC cards
  - RS232 serial port x1
  - Micro SIM slot

- Expansion
  - Mini PCIe slots x2 (full/half size)
  - mSATA x1 (shared Mini PCIe)
  - FACE Module
- OS
  - Windows 7, 8; 32/64-bit
  - Linux 32/64-bit

* fit-PC4 Value models supplied with AzureWave 2.4Ghz 802.3 b/g/n + BT3.0 Wireless module

fit-PC4 – Top Level Block Diagram

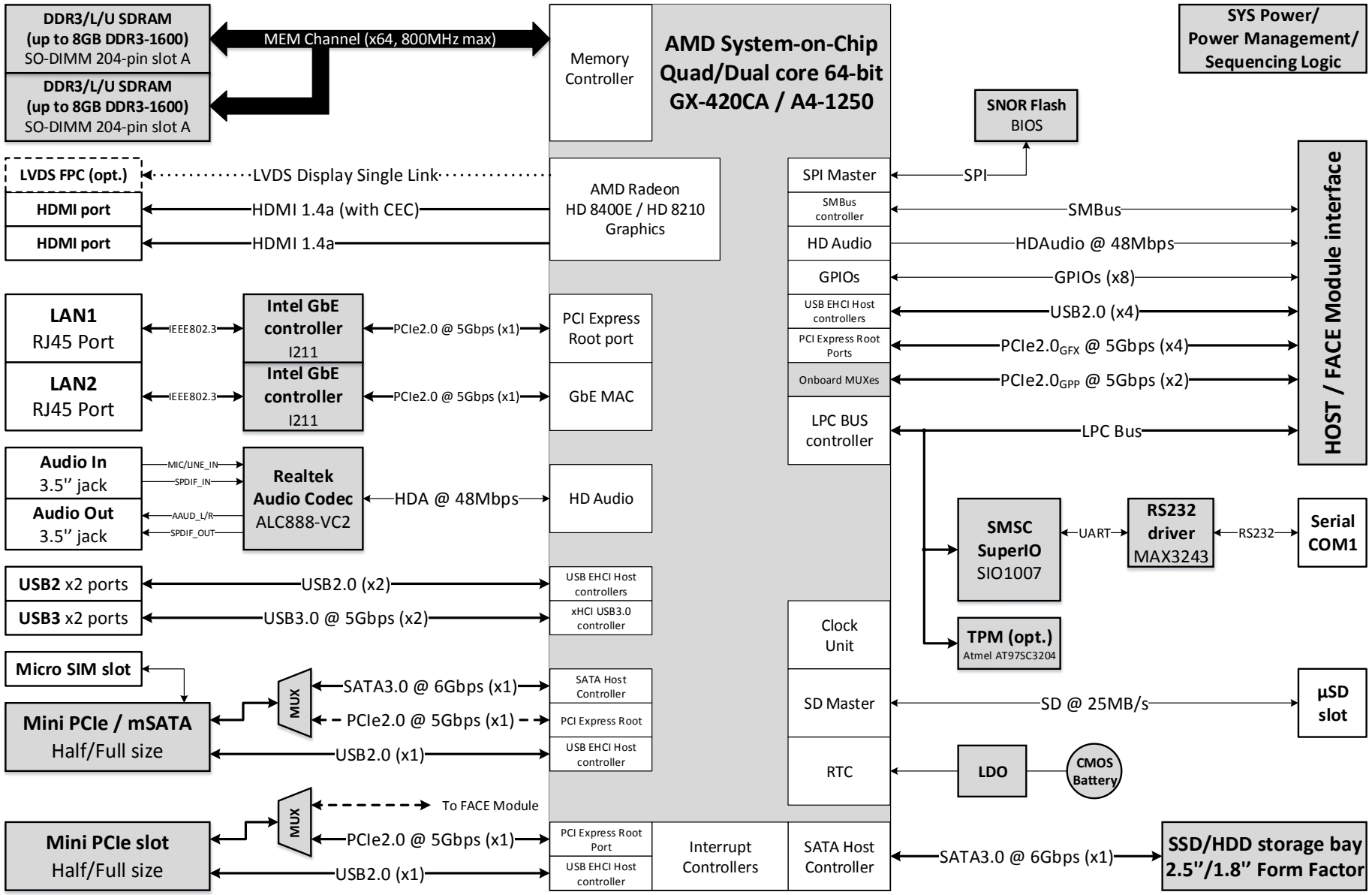

fit-PC4

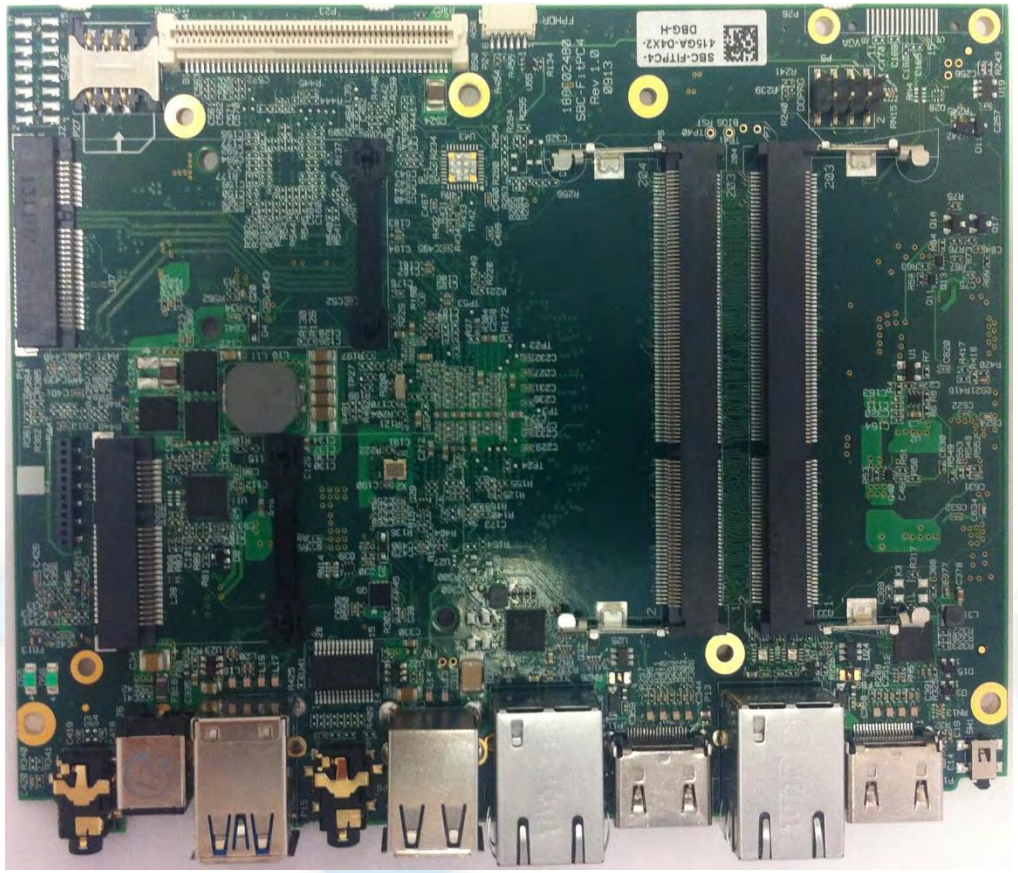

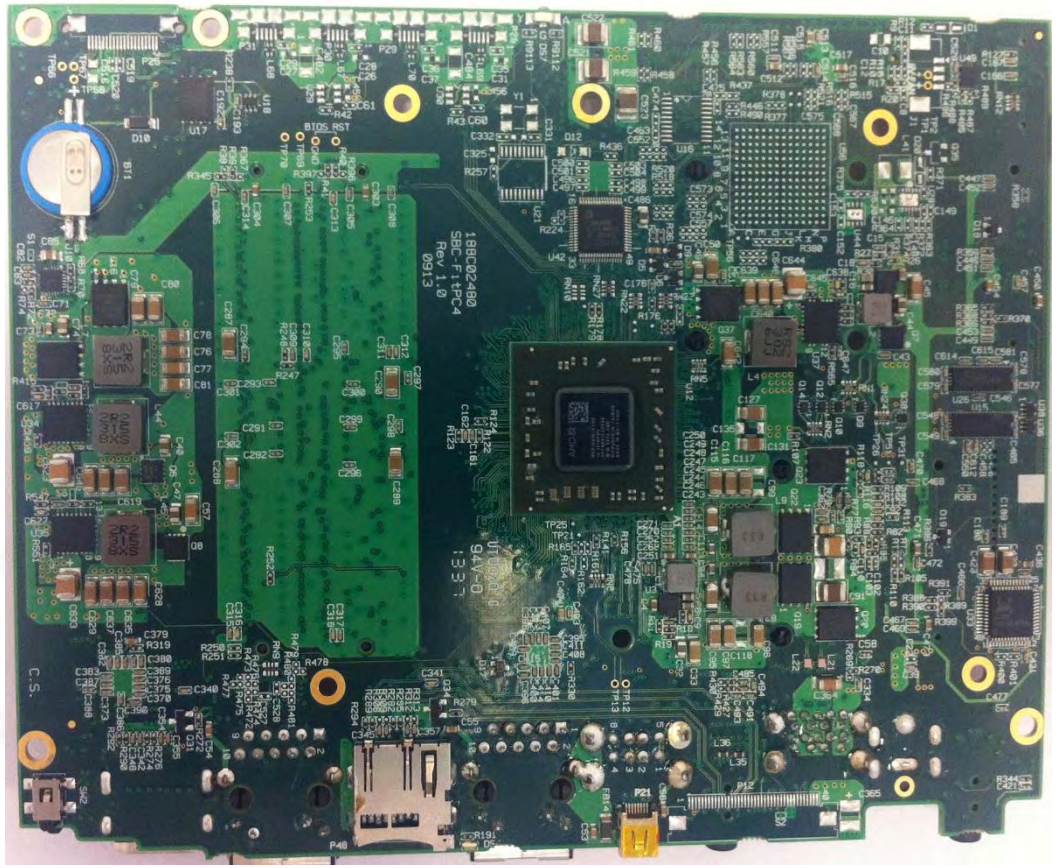

fit-PC4 – Models & Processor SKUs

Model	fit-PC4 Value	fit-PC4 Pro
APU System-on-Chip	A4-1250 “Temash”	GX-420CA “Kabini”
Cores	64-bit dual core	64-bit quad core
Core Clock	1.0GHz	2.0GHz
Last Level Cache	512kB	2MB
Lithography	28nm	28nm
TDP	8W	25W
Graphics	AMD Radeon HD 8210	AMD Radeon HD 8400E
Graphics Memory Allocated/Max	512MB/1.7GB	512MB/1.7GB

fit-PC4 – Memory Interface

- Single 64-bit wide channel of DDR3 SDRAM memory
- Non-ECC, Unbuffered SO-DIMM modules
- DDR3/3L/3U operating voltage of 1.5V/1.35V/1.25V
- BW_{max} = 10.6 GB/s with DDR3/3L/3U-1333 modules
- BW_{max} = 12.8 GB/s with DDR3/3L-1600 modules

fit-PC4 – Memory Interface

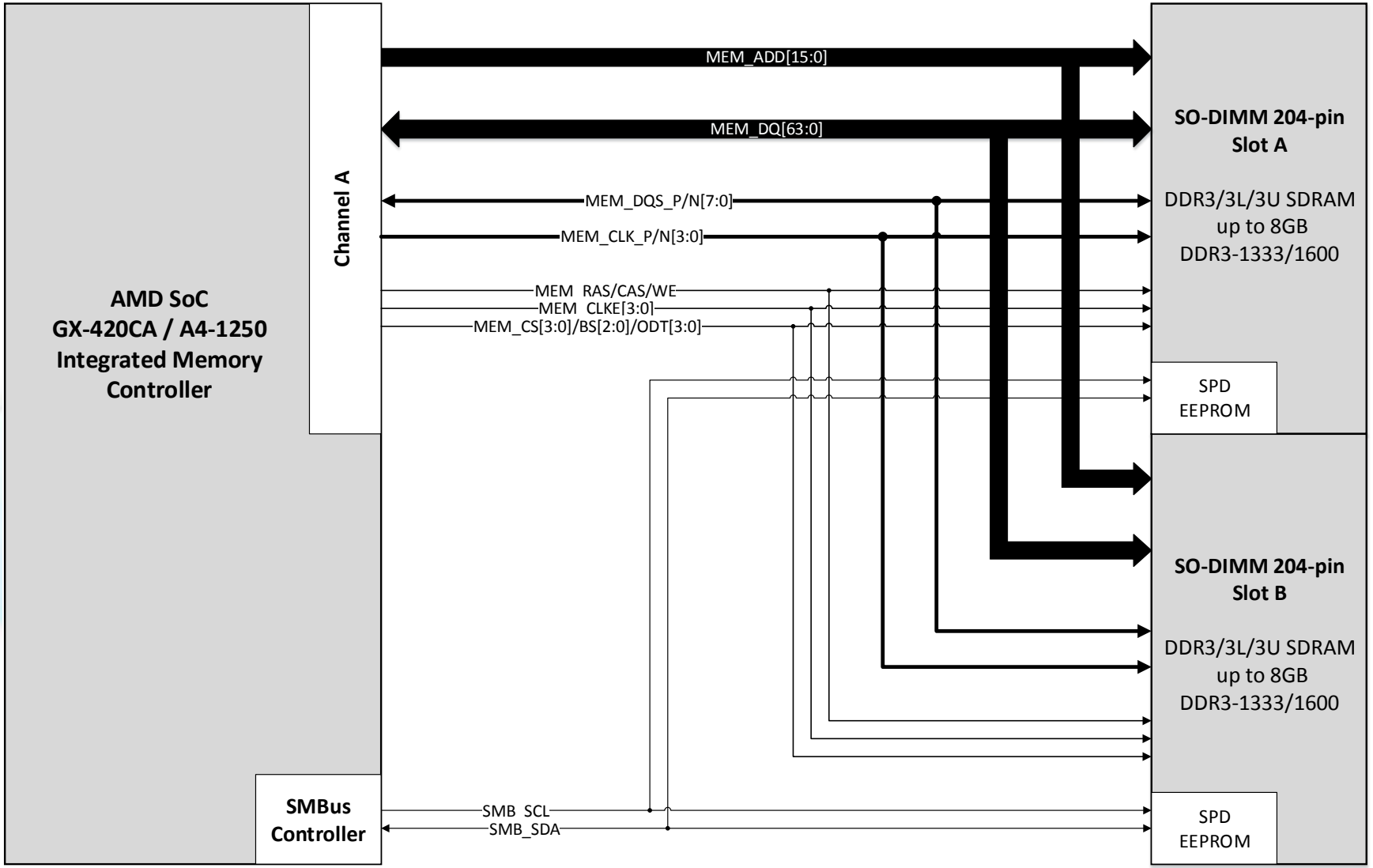

fit-PC4 – Display Interface

Digital Display Interface (DDI)		Supported Video Resolutions & Audio Formats
DDI1	HDMI 1.4a + CEC	1920 x 1200 @ 60 Hz
DDI2	HDMI 1.4a	1920 x 1200 @ 60 Hz
DDI3* (optional)	LVDS single link 18bpp	1600 x 900 @ 60 Hz
Embedded Audio (DDI1 and DDI2 only)		Dolby* Digital; Dolby Digital Plus; DTS-HD*; Dolby TrueHD, DTS-HD Master Audio* (Lossless Blu-Ray Disc Audio Format)

- DVI: x3 TMDS Lanes @ 1.65Gbps; BW_{max} = 4.95Gbps, $Throughput_{max}$ = 3.96Gbps (due to 8b/10b encoding overhead)
- HDMI1.4a: x3 TMDS Lanes @ 1.65Gbps, 3Gbps; BW_{max} = 9Gbps, $Throughput_{max}$ = 7.2Gbps (due to 8b/10b encoding overhead)
- DDI3 is an optional interface available for MOQ > 100

fit-PC4 – Storage

- SATA Host Controller supports AHCI mode
- 2x SATA3.0 ports with transfer rates up to 6Gbps
- Examples (from Compulab stock):

Manufacturer	Type	Capacity	PN/Model Name
Micron Phison	mSATA SSD	120 GB	MTFDDAT120MAV EA6350110QS2TI114SVEC
Micron ADATA	2.5'' SSD	128 GB	MTFDDAC128MAM AS510S3-120GM-C
Hitachi Western Digital Toshiba	2.5'' HDD @ 5400rpm	320 GB	HTS545032A7E380, HTS545032B9A300 WD3200BPVT, WD3200LPVX MQ01ABD032
Hitachi Western Digital Seagate Toshiba	2.5'' HDD @ 5400rpm	500 GB	HCC547550A9E380 WD5000LPVX ST905003N1A1AS-RK MK50[5|6]5GSX

fit-PC4 – SATA Interface Scheme

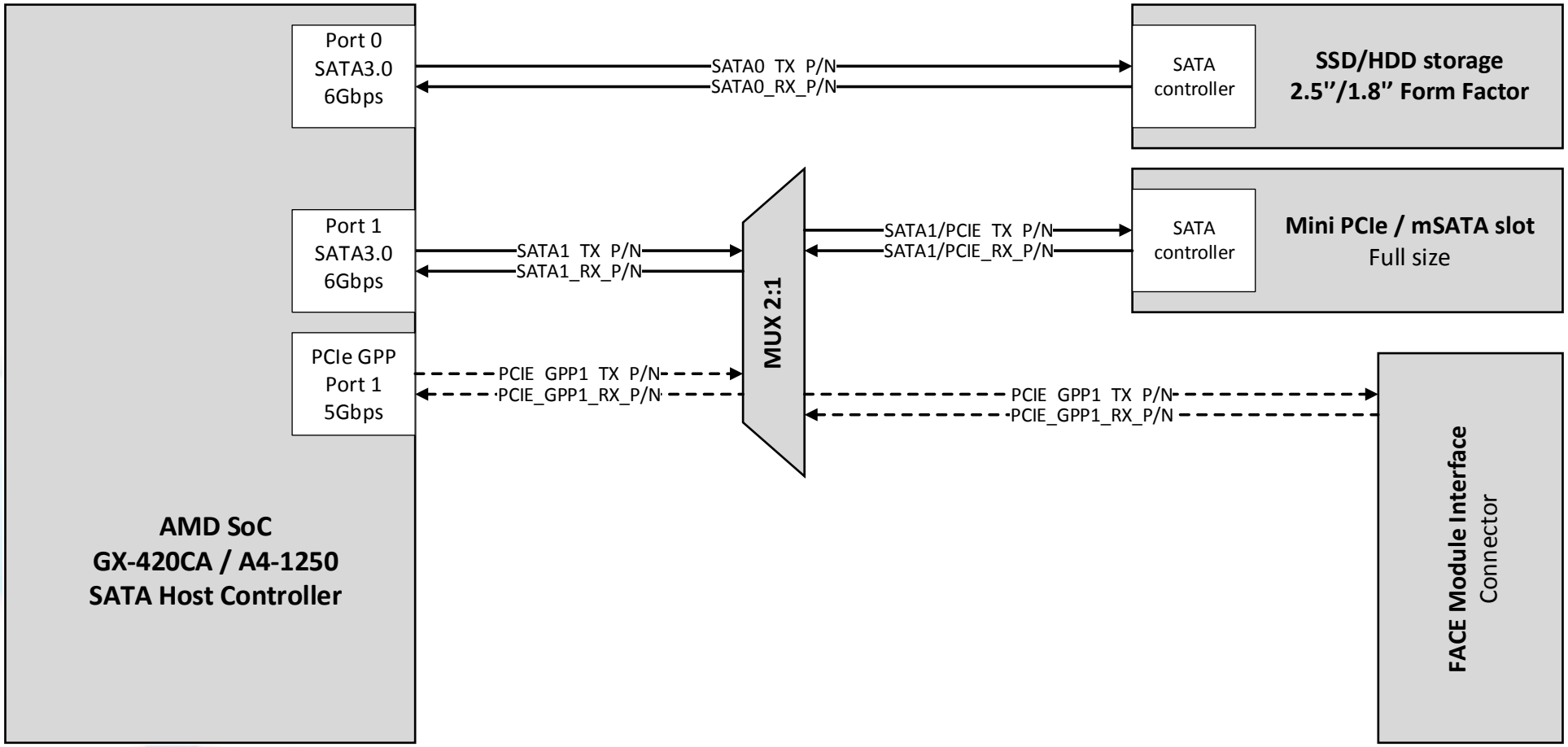

fit-PC4 – mSATA/mini PCIe Multiplexing

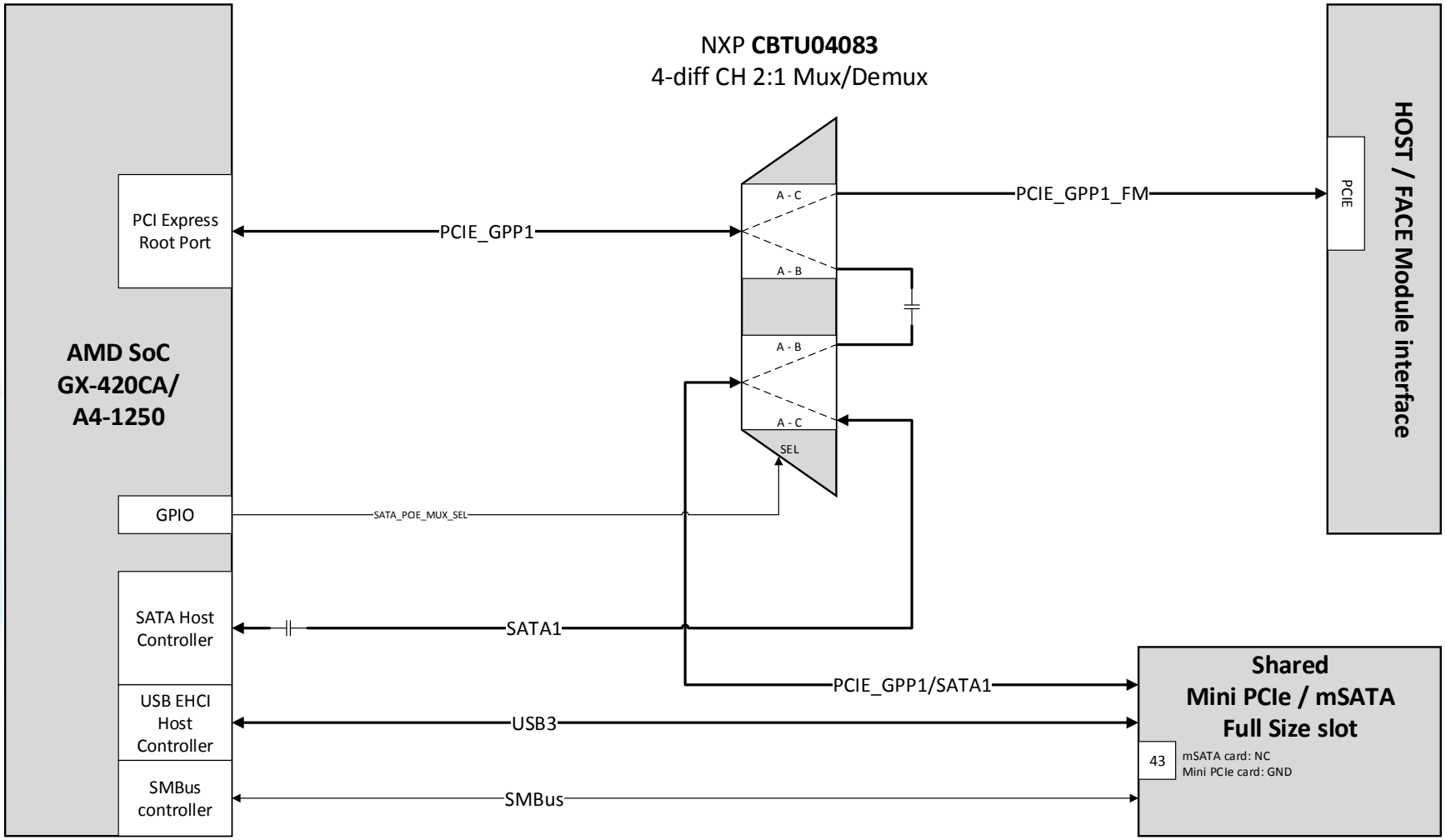

fit-PC4 – PCI Express

- PCI Express 2.0 specification with transfer rates up to 5.0 GT/s
- Implemented ports:
  - 2x PCIe GPP root ports dedicated for Intel I211 GbE controllers
  - 1x PCIe GPP root port shared with SATA and routed via MUX to mSATA slot or FACE Module
  - 1x PCIe GPP root port shared between mini PCIe slot and FACE Module
  - 4x PCIe GFX root ports routed to FACE Module (allows 1x1, 1x2, 1x4 configurations)

fit-PC4 – PCI Express Scheme

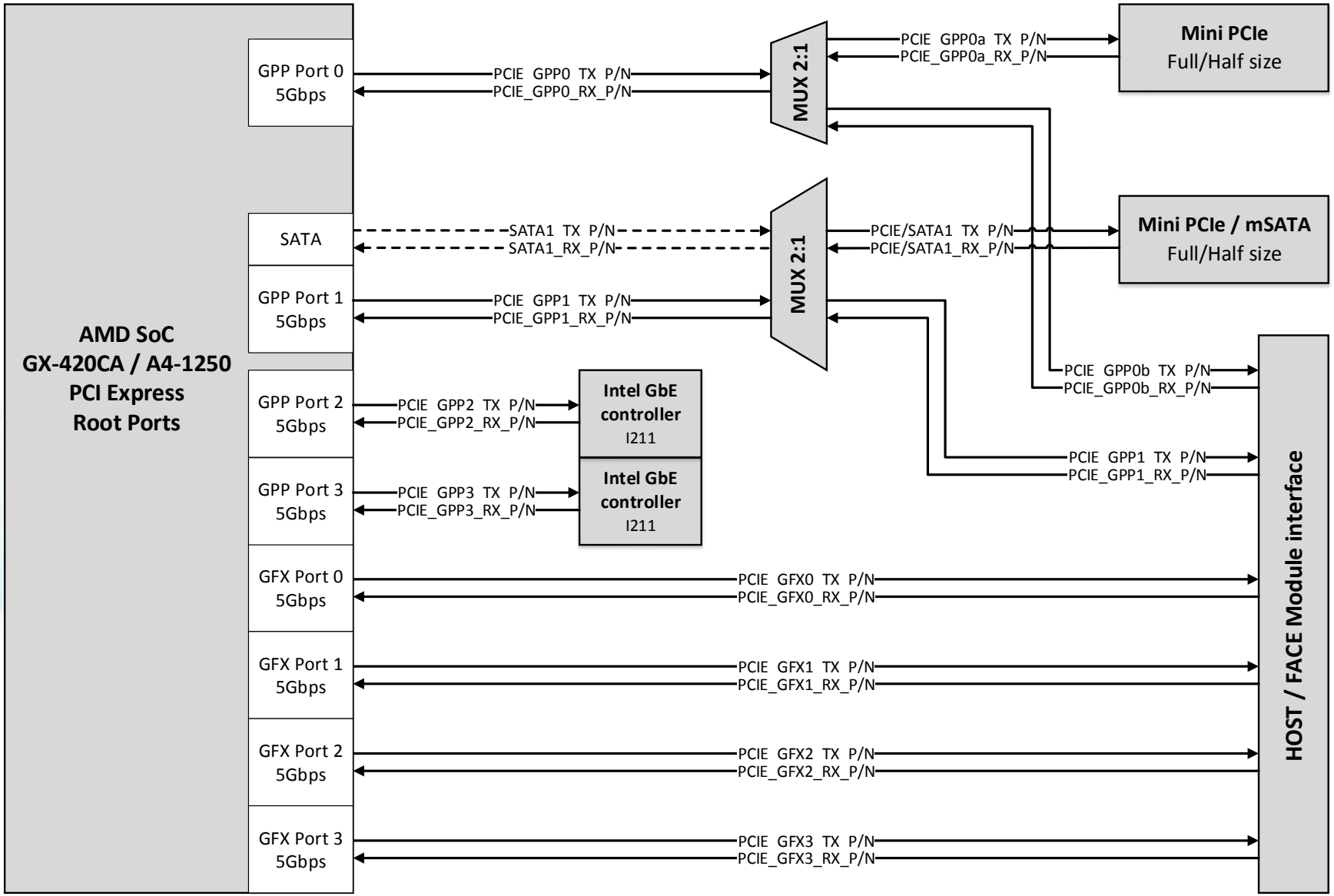

fit-PC4 – Networking

- LAN
  - 2x Intel GbE LAN ports
  - Intel I211 GbE Controller
- Wireless
  - Intel® Dual Band Wireless-AC 7260 2x2 AC + BT card
  - WLAN IEEE 802.11ac
  - BT4.0
- Cellular
  - Allows mount of 2G/3G/4G Cellular Modem in mini PCIe form factor
  - Micro SIM onboard slot available
  - Telit HE910 mini PCIe card (3G: UMTS/HSPA+) available

fit-PC4 Pro – Wireless WLAN/BT Connectivity

- Intel® Dual Band Wireless-AC 7260 2x2 AC + BT
- Mini PCI Express Form Factor
- WLAN 802.11ac
  - Throughput: 867Mbps
  - Frequency bands: 2.4GHz or 5GHz
  - Tx/Rx chains: 2x2
  - PCI Express host interface
  - AMT support
- Bluetooth 4.0
  - BT3.0 + HS + Low Energy (BLE)
  - Throughput: 24Mbps
  - Frequency band: 2.4GHz
  - USB host interface
- Two RF antennas: 1x WiFi dedicated, 1x WiFi/BT shared

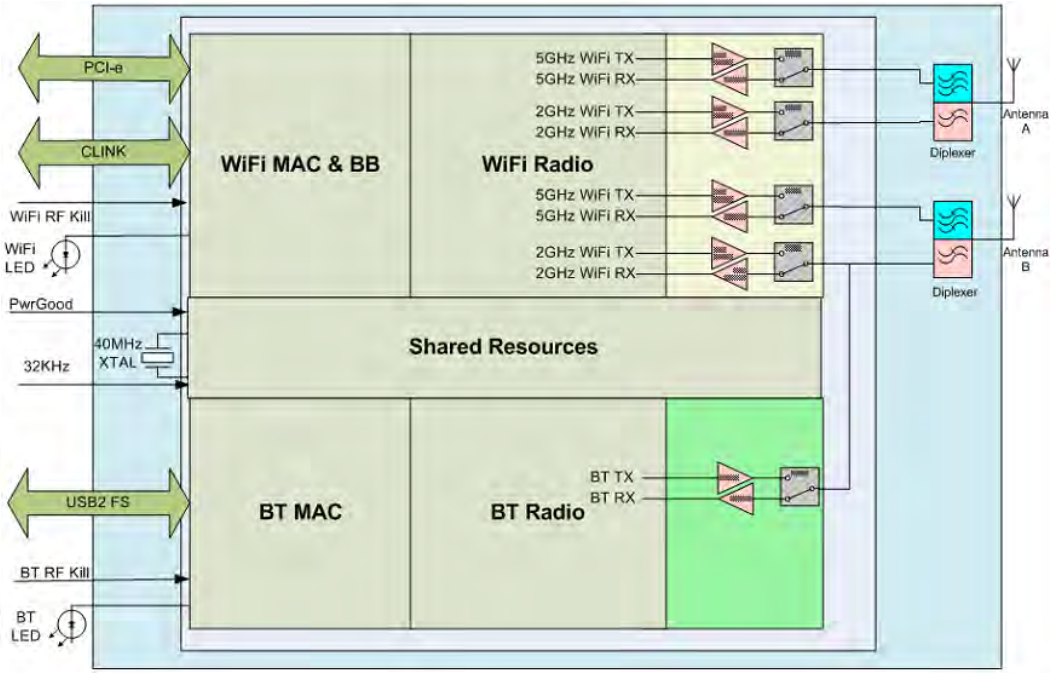

* fit-PC4 Value models supplied with AzureWave 2.4Ghz 802.3 b/g/n + BT3.0 Wireless module

fit-PC4 – USB Interface Scheme

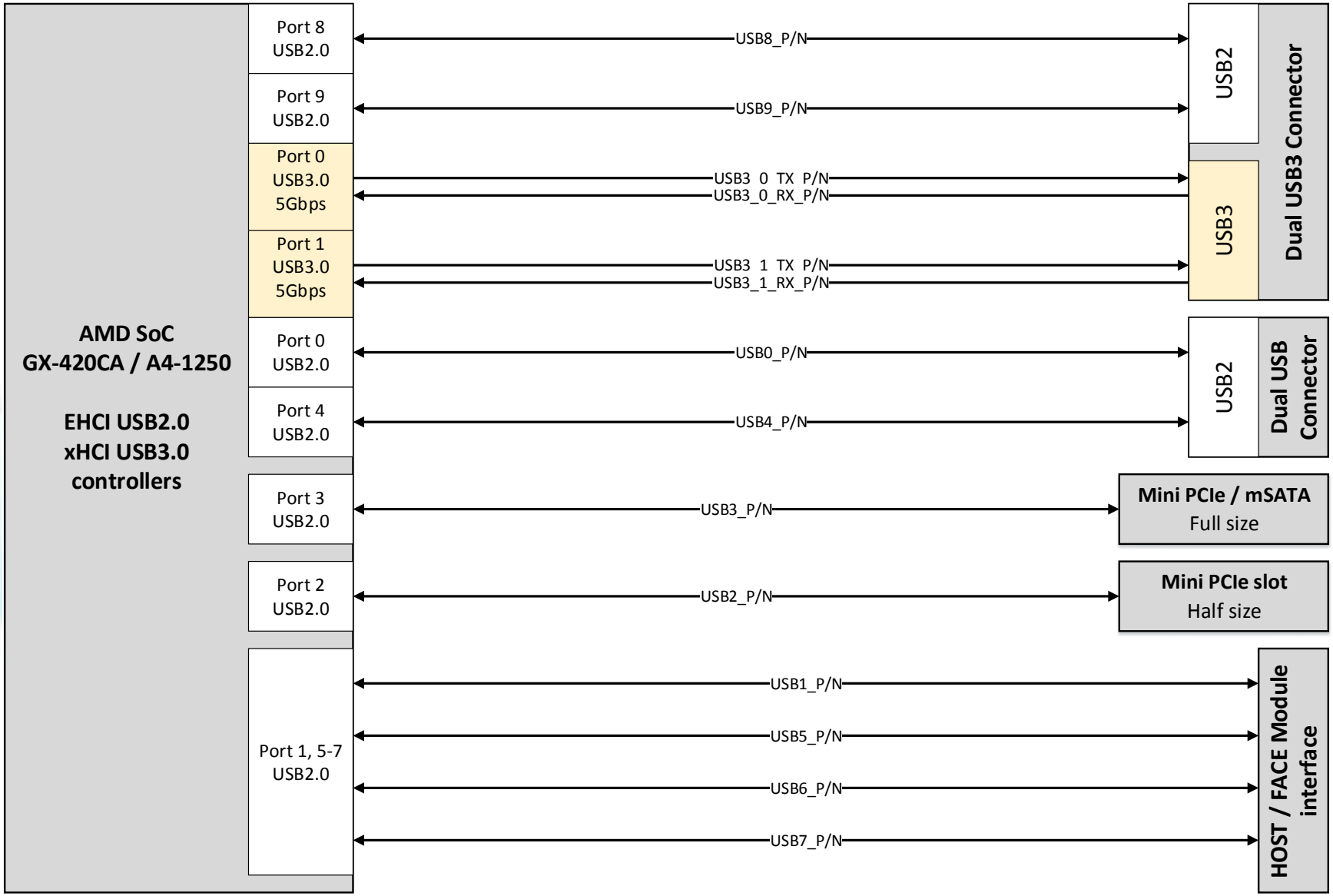

fit-PC4 – SD interface and RS232 Serial Port

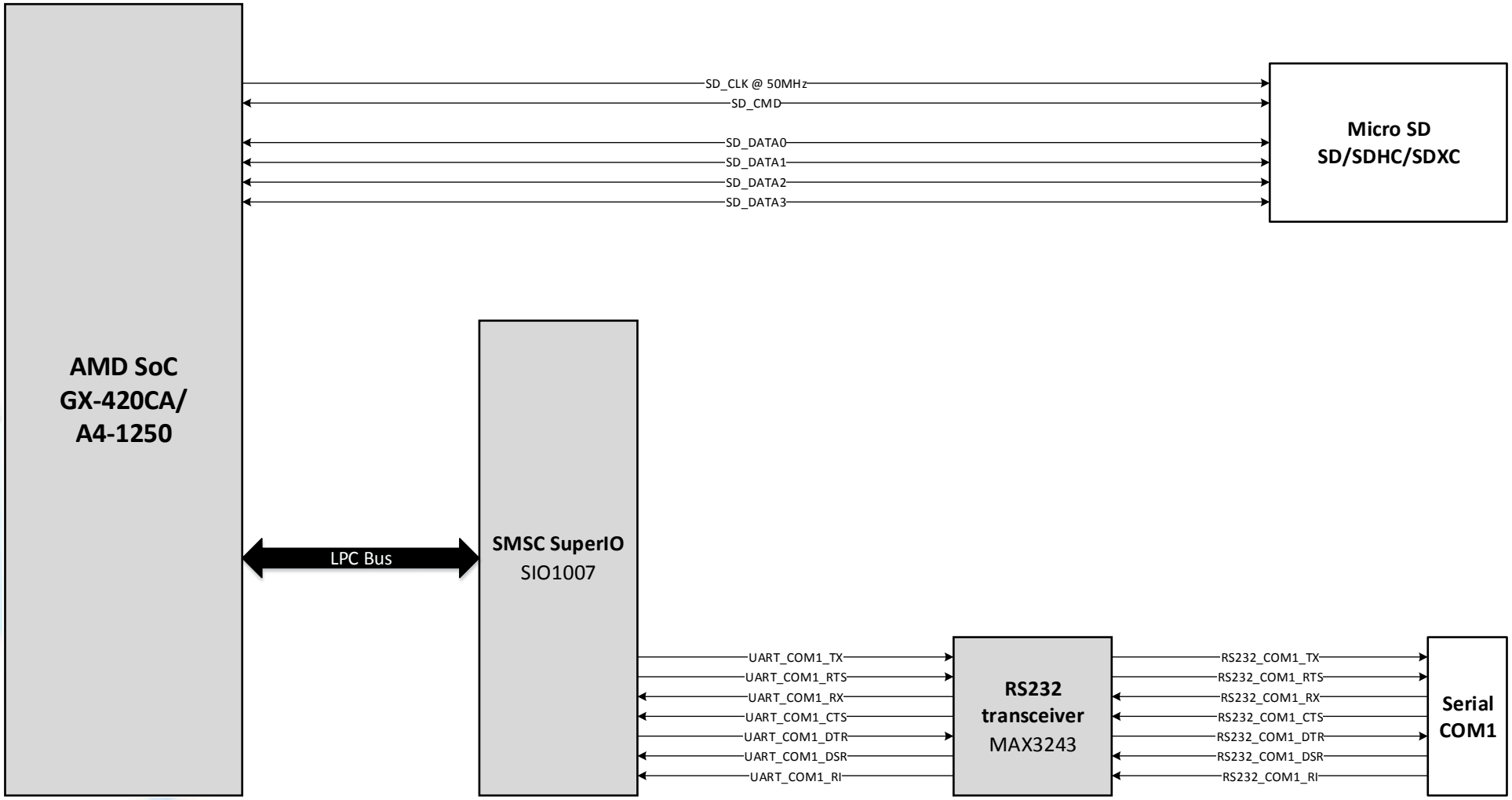

fit-PC4 – Audio

- Realtek ALC888-VC2 HD audio codec
- Audio Output:
  - Analog Amp stereo output capable to drive 16/32Ω loads
  - Digital 7.1 channels S/PDIF output
  - 3.5mm jack

Pin	Signal Name	Jack pin-out	Mating plug
1	AUDIO_GND	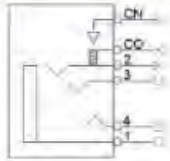	
2	SPDIF_OUT		
3	AUDIO_OUT_R		
4	AUDIO_OUT_L		

- Audio Input:
  - Analog stereo microphone input
  - Digital S/PDIF input
  - 3.5mm jack

Pin	Signal Name	Jack pin-out	Mating plug
1	AUDIO_GND	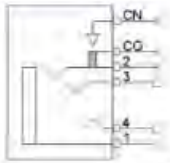	
2	SPDIF_IN		
3	AUDIO_IN_R		
4	AUDIO_IN_L		

fit-PC4 – Power & Environmental

Power Supply	12Vdc nominal (10V – 15V)

ACPI Power State	Power Consumption (Pro/Value)	Operating Conditions
G0/S0 (Active, system 90% load)	24W/11W	Active
G0/S0 (Active, system 10% load)	6W/5W	Active
G1/S3 (Suspend to RAM)	~1.2W	Sleep
G1/S4 (Suspend to Disk)	~1.2W	Hibernate
G2/S5 (Soft Off)	~1W	Shut down
G3 (Mechanical Off)	6-10uA for RTC	RTC is powered from battery
Average working consumption	**15W/8W**	

Operating Conditions	Operating Temperature Grades		
	Commercial	Extended (TE)	Industrial (TI)
HDD models	0°C – 50°C	N/A	N/A
SSD models	0°C – 70°C	-20°C – 70°C	-40°C – 70°C

fit-PC4 – Industrial Functionality

- Auto On
- PXE Boot
- Watchdog
- Wake on LAN
- Wake on Timer
- Wake on USB
- Wake on PCI Express wake event

fit-PC4 – Prices

Model	fit-PC4 Value	fit-PC4 Pro
Barebone	$299	$380
Linux		$508
Windows 7		$674
SSD Windows 7		$808
Warranty	**5 years**	**5 years**

FACE Modules

CompuLab

FACE Modules – Concept

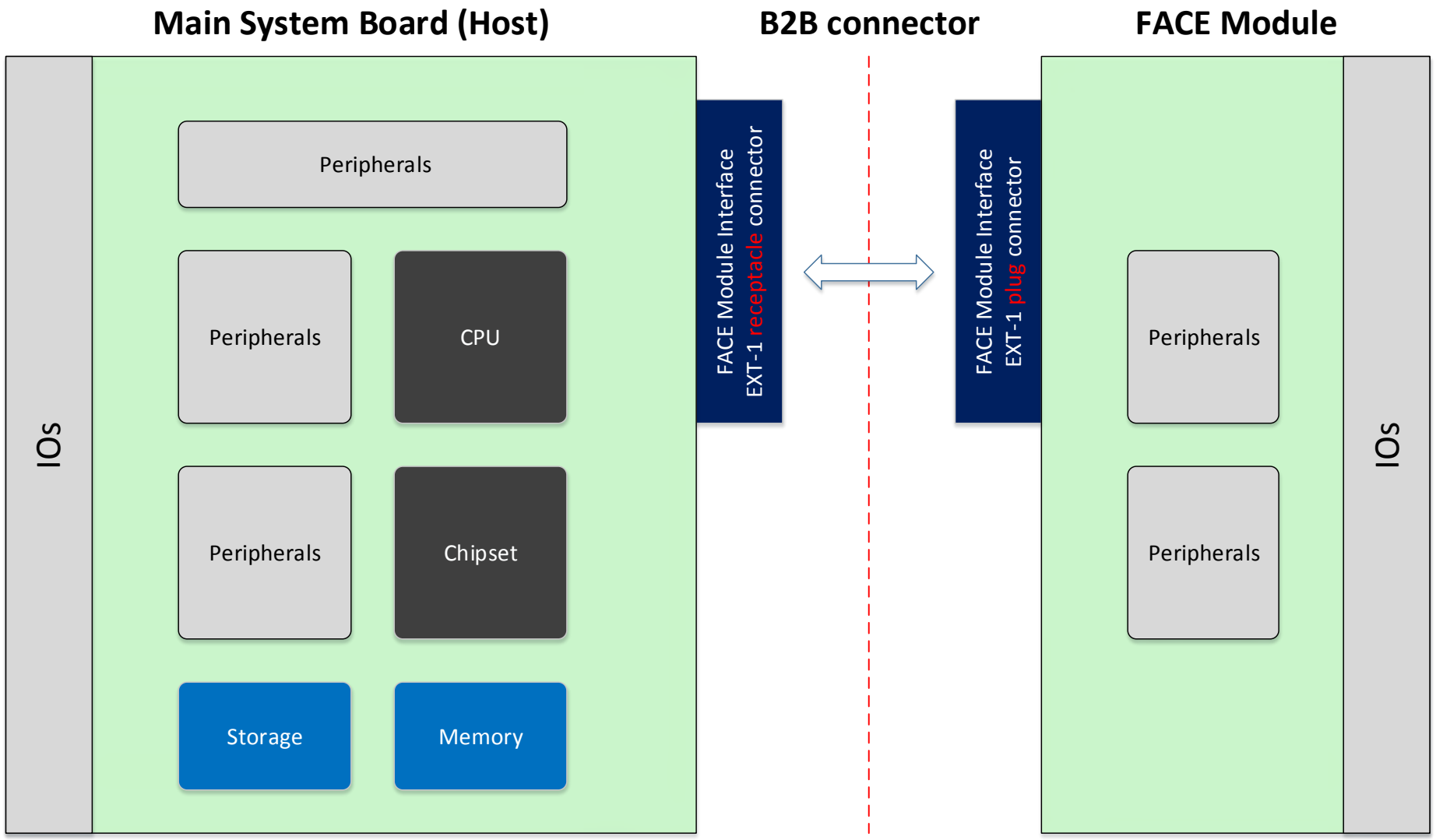

FACE Modules – Highlights

- **F**unction **A**nd **C**onnectivity **E**xtension Module provides extended peripheral and I/O functionality
- Flexible Host interface design
- High speed connectivity offers PCI Express, SATA and USB Host interfaces
- Industry standard LPC Bus, RS232, SMBus/I2C and GPIOs
- Surveillance, CCTV and video capture solutions
- Off-the-shelf popular Networking solutions
- Application specific 3rd party design

Fit-PC4 and FACE Modules compatibility

	FACE Modules							
Systems	**FM-4USB**	**FM-USB3**	**FM-SER**	**FM-1LAN**	**FM-4LAN**	**FM-2PCIE**	**FM-VC**	**FM-POE**
Fit-PC4	✓	✗	✗	✓*	✗	✓	✓	✗

- FM-1LAN on fit-PC4 supports only two USB2.0 ports

Reference Material

- For CompuLab website please visit:
  www.compulab.co.il

- For fit-PC product line website please visit:
  www.fit-pc.com

- FACE Modules compatibility matrix application note:
  http://fit-pc.com/download/face-modules/documents/app-note-products-fm-compatibility-matrix.pdf

Thank you

CompuLab